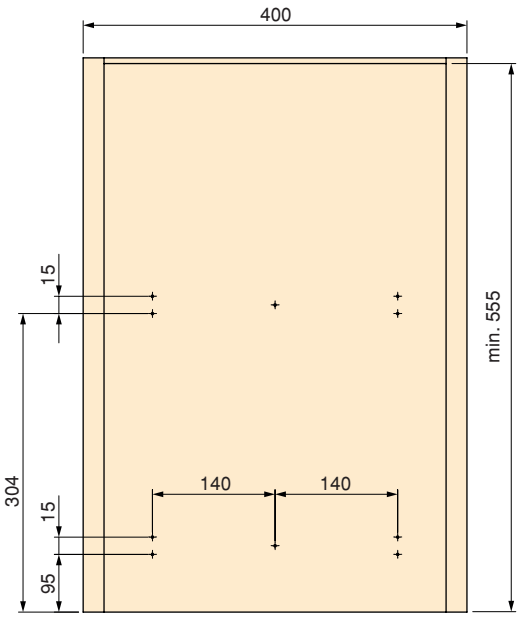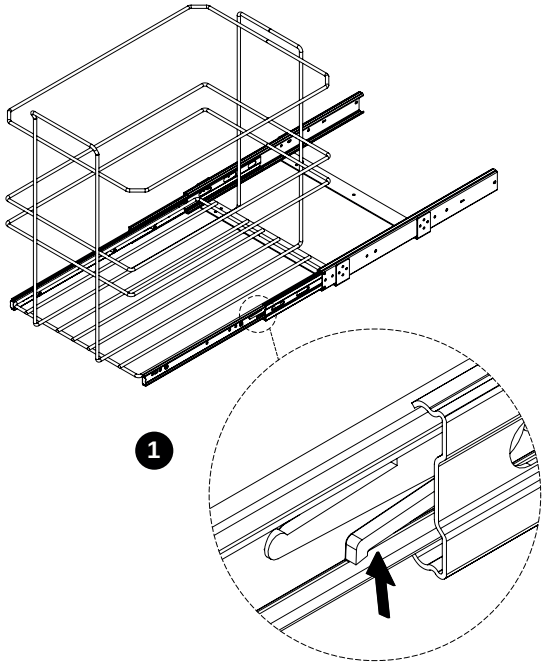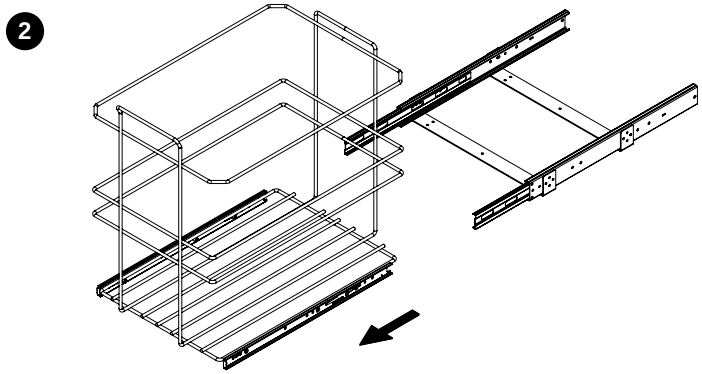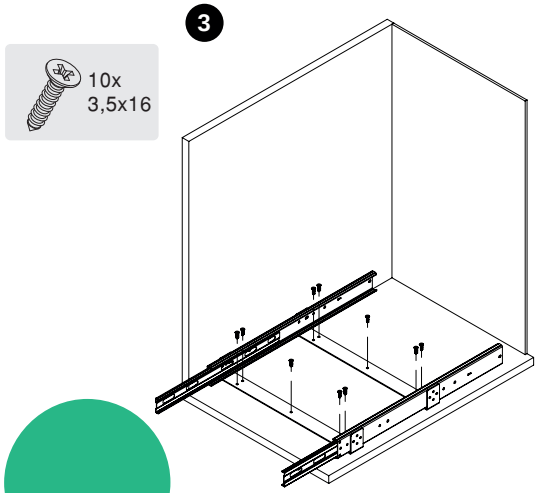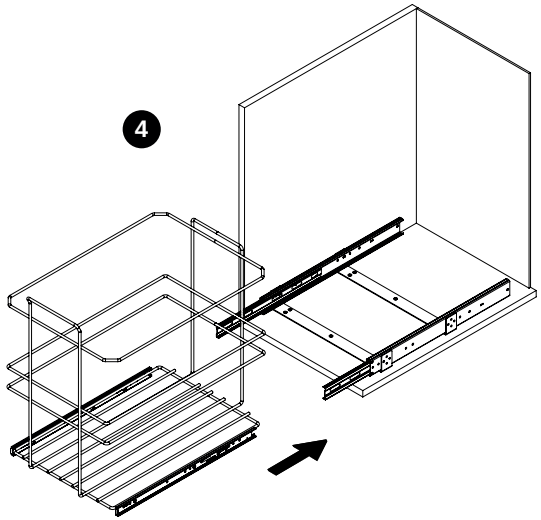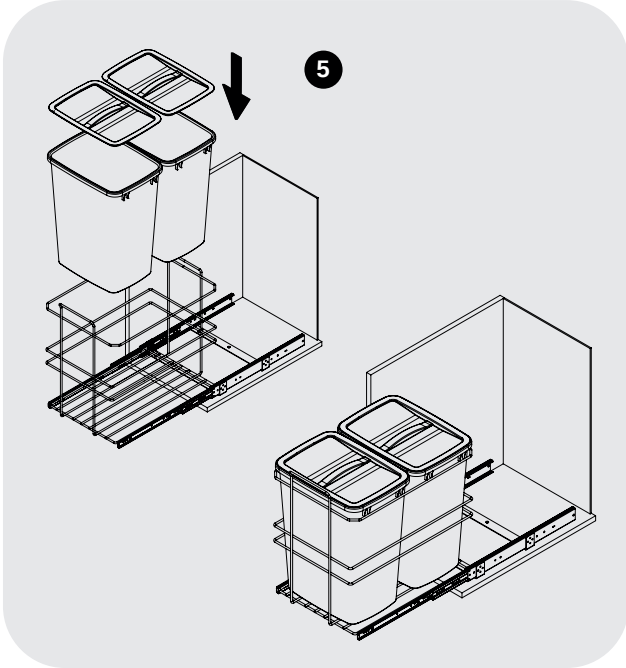RECYCLE 2x35L